V 03230

MADE EXCLUSIVELY FOR

BALSAM HILL®

WWW.BALSAMHILL.COM

ROLLING STORAGE CHEST FOR WREATHS AND GARLANDS

ITEM # 4003375 | MODEL #: TK-30006-RS-BH

IMPORTANT, RETAIN FOR FUTURE REFERENCE:
READ CAREFULLY

Intended for indoor use

PARTS

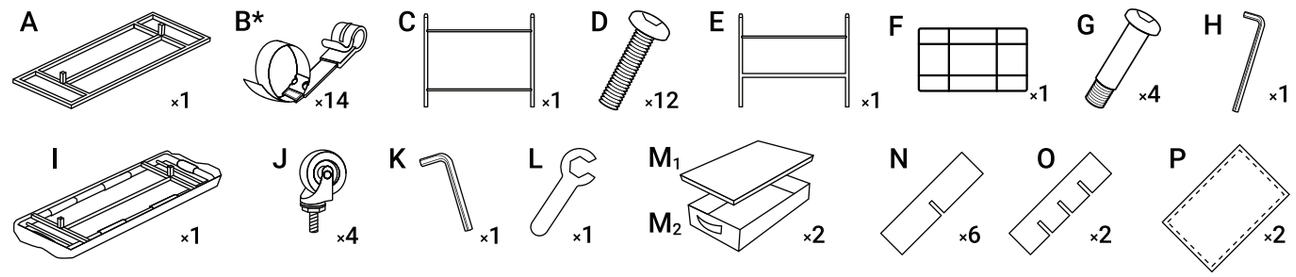

*comes preassembled

1

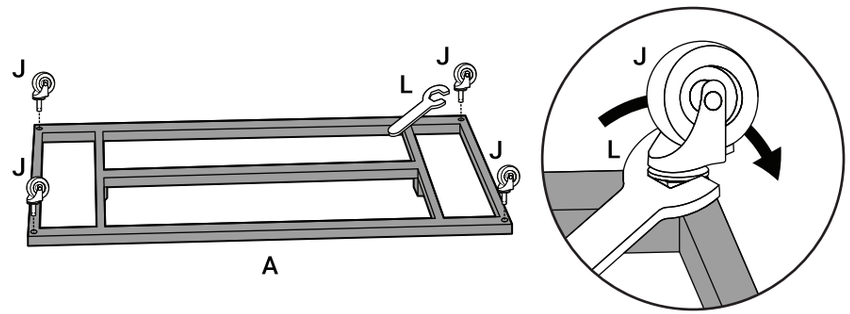

2

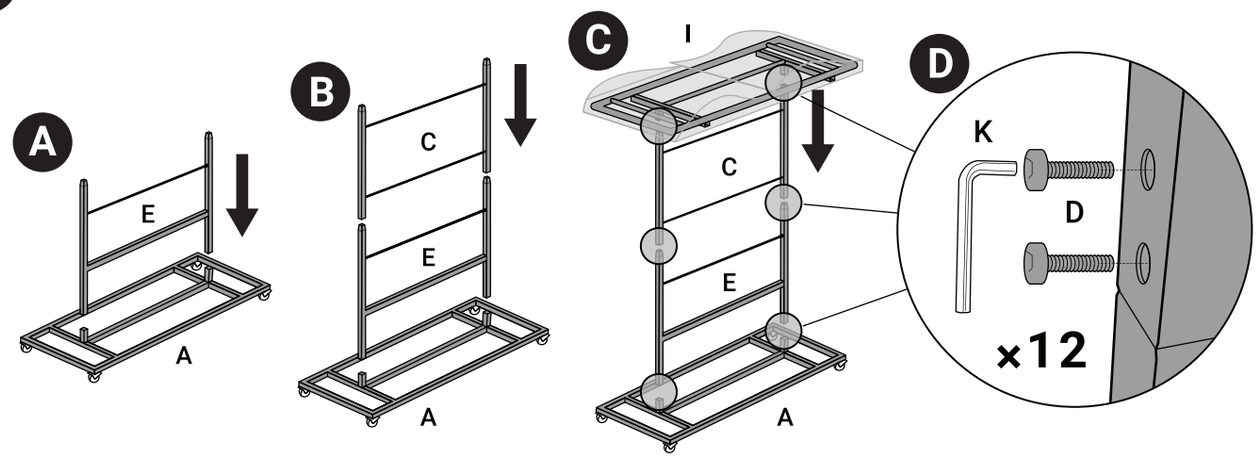

V 03230

MADE EXCLUSIVELY FOR

BALSAM HILL®

WWW.BALSAMHILL.COM

ROLLING STORAGE CHEST FOR WREATHS AND GARLANDS

ITEM # 4003375 | MODEL #: TK-30006-RS-BH

IMPORTANT, RETAIN FOR FUTURE REFERENCE:
READ CAREFULLY

Intended for indoor use

PARTS

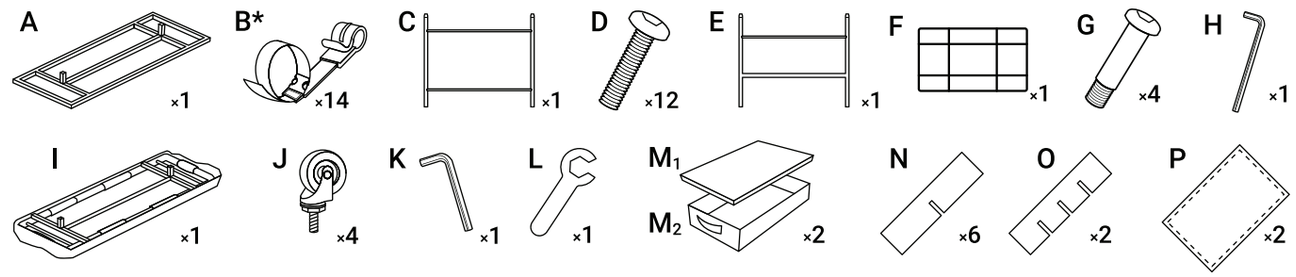

*comes preassembled

3

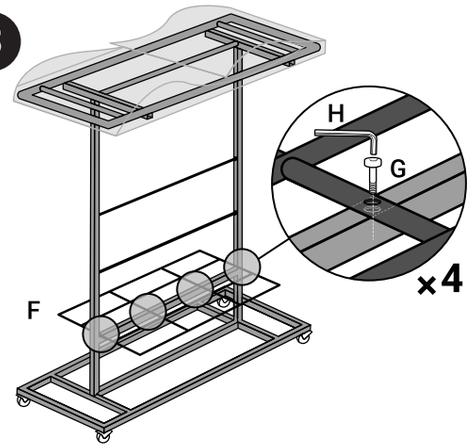

4

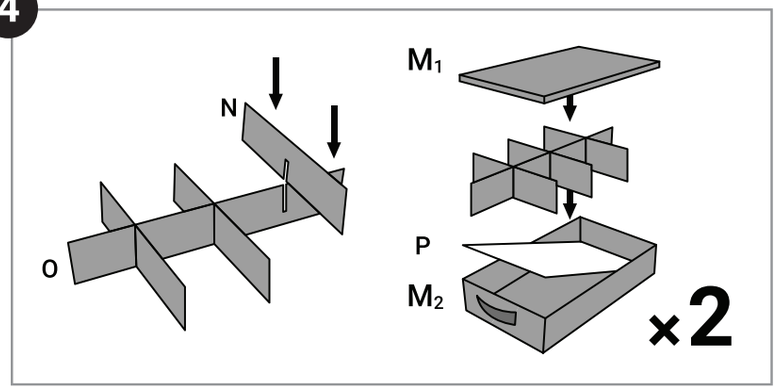

5

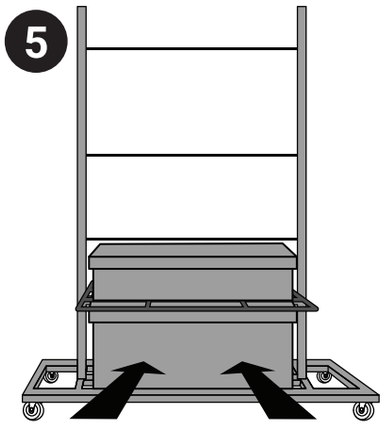

6

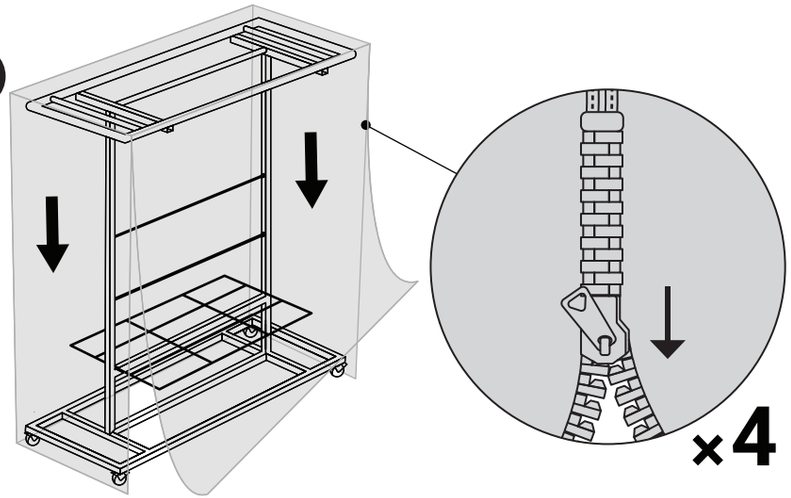

V 03230

MADE EXCLUSIVELY FOR

BALSAM HILL®

WWW.BALSAMHILL.COM

ROLLING STORAGE CHEST FOR WREATHS AND GARLANDS

ITEM # 4003375 | MODEL #: TK-30006-RS-BH

IMPORTANT, RETAIN FOR FUTURE REFERENCE:
READ CAREFULLY

Intended for indoor use

PARTS

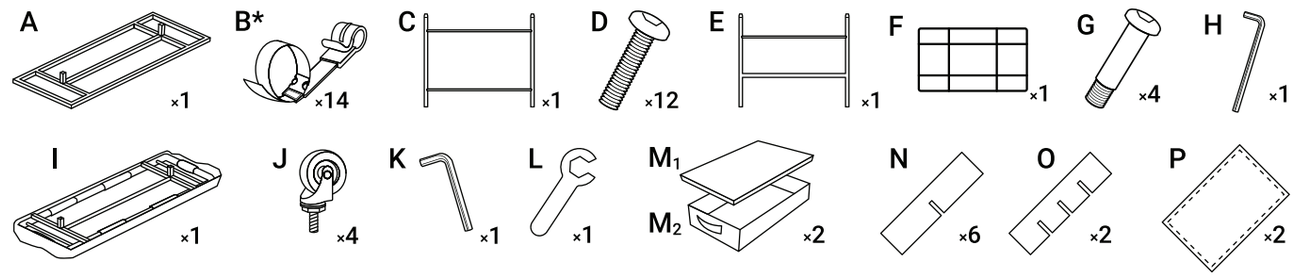
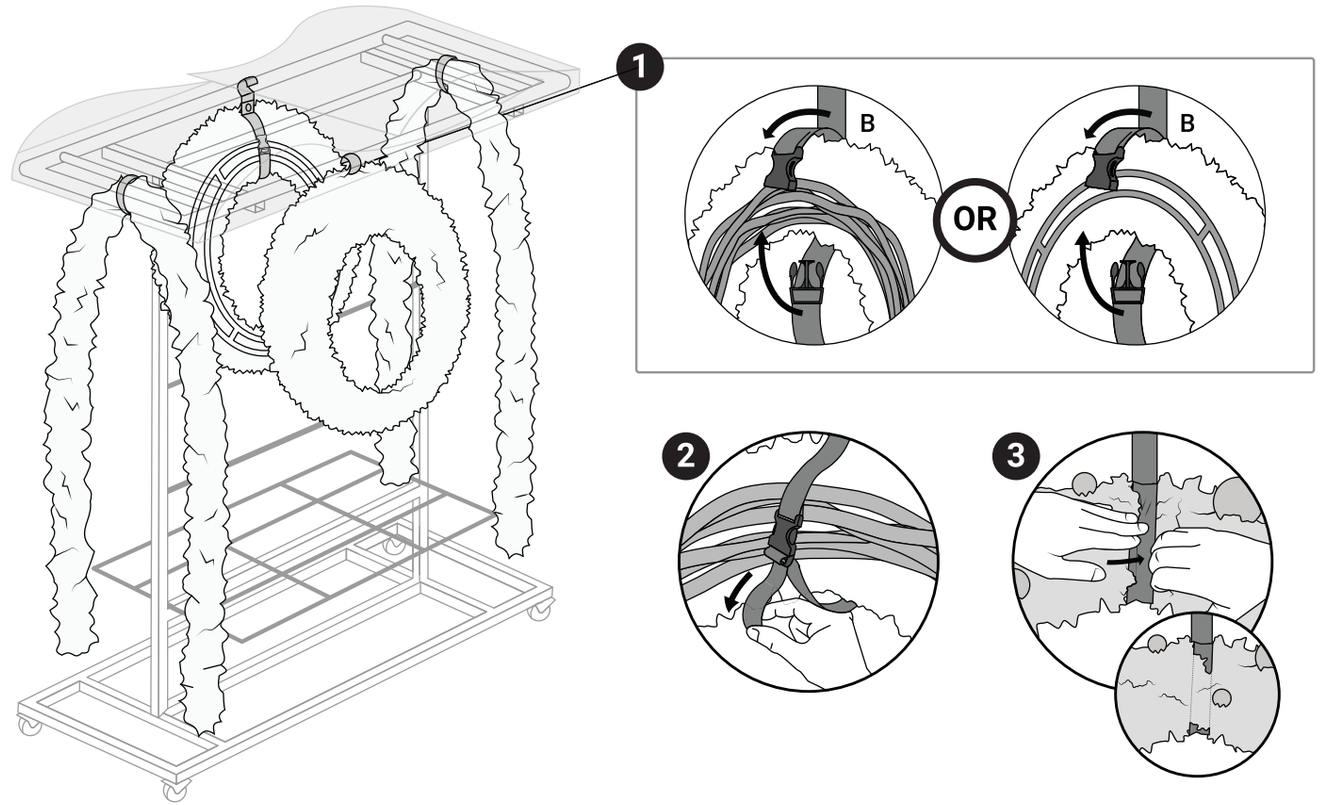
*comes preassembled